**Customer Drawing**

| REV | DATE | DESCRIPTION | ECN NO. | NAME |
|---|---|---|---|---|
| A | 12.06.15 | PROPOSAL | | Allen |

**HF** Compliant

# 1212-SERIES SATA 7+15P BACKPLANE CONN. HIGH RAISE DIP TYPE

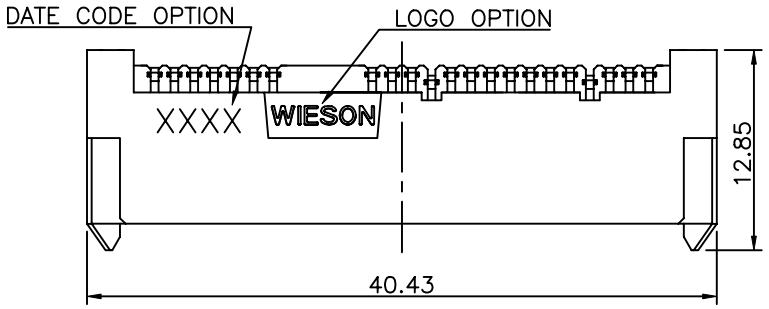


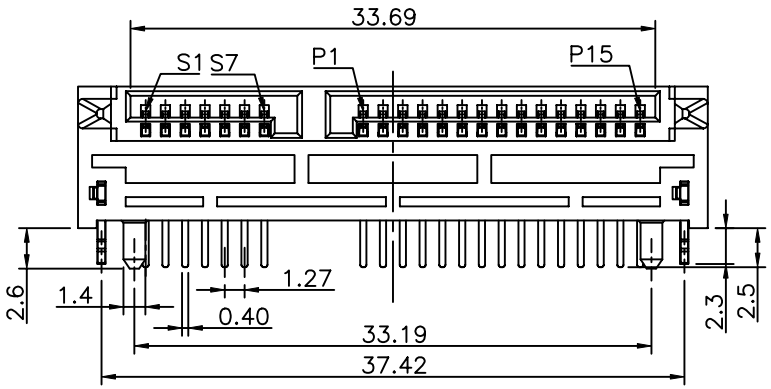


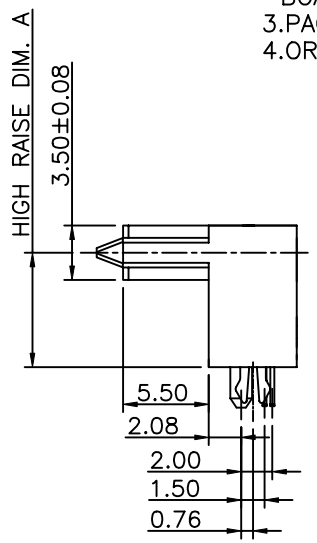


NOTE :
1.MATERIAL :
HOUSING: HIGH TEMPERATURE THERMOPLASTIC, UL94V-0, COLOR: BLACK.
TERMINAL: COPPER ALLOY.
BOARD LOCK: COPPER ALLOY.
2.PLATING :
TERMINAL: SELECTIVE Au PLATED ON CONTACT AREA(SEE ORDER INFORMATION), Sn PLATED ON SOLDER TAIL AREA, BOTH Ni UNDERPLATED OVERALL.
BOARD LOCK: Sn PLATED OVERALL, BOTH Ni UNDERPLADED OVERALL.
3.PACKAGE: TRAY
4.ORDER INFORMATION: G1212-89 XX X X XX -H0
(01) (02) (03) (04)

(01)
- 00: W/ DATE CODE, W/ LOGO
- 01: W/O DATE CODE, W/ LOGO
- 02: W/ DATE CODE, W/O LOGO
- 03: W/O DATE CODE, W/O LOGO

(02)
- 0: A TYPE
- 1: B TYPE
- 2: C TYPE

(03)
- 0: BOARD LOCK FOR 1.2T PCB
- 1: BOARD LOCK FOR 1.6T PCB

(04)
- 01: 1u" Au PLATED ON CONTACT AREA
- 02: 3u" Au PLATED ON CONTACT AREA
- 03: 5u" Au PLATED ON CONTACT AREA
- 04: 15u" Au PLATED ON CONTACT AREA

| TYPE | HIGH RAISE DIM. A |
|---|---|
| A | 5mm |
| B | 7.35mm |
| C | 9mm |

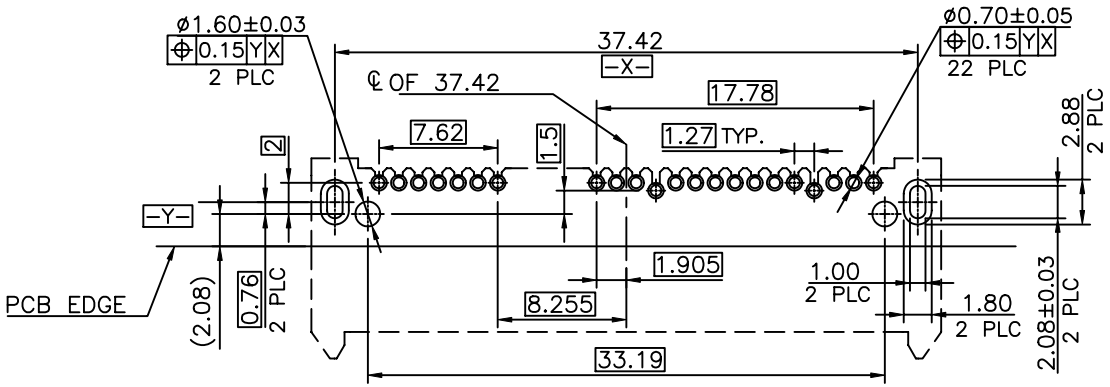


RECOMMENDED PCB LAYOUT
THICKNESS:1.2 OR 1.6mm TOLERANCE: ±0.05mm

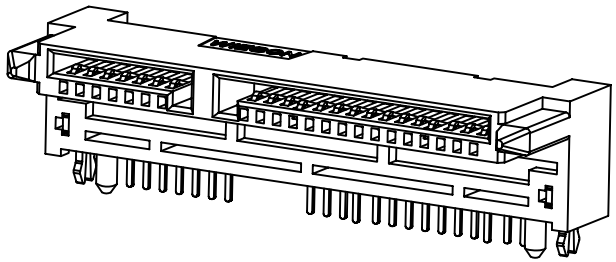

| GENERAL TOLERANCE | WIESON TECHNOLOGIES CO., LTD | | PART NO.: G1212-89XXXXXX-H0 | |
|---|---|---|---|---|
| X.X =±0.20 | DRAWN BY | Allen Sun(WST) | DRAWING NO. | G1212-89XXXXXX-H0 |
| X.XX =±0.15 | CHECKED BY | HSIEN | DRAWING SIZE | 2 : 1 A4 |
| X.X° =±3° | APPROVED BY | FRED LEE | UNIT | mm |
| | SORTING NO. | WSC | PAGE | 1 OF 1 |

[ARTICLE:044033 V6]